BL 1228

PDF

Mackintosh Black Lever
Three Hole Basin Mixer
with Pop-up Waste
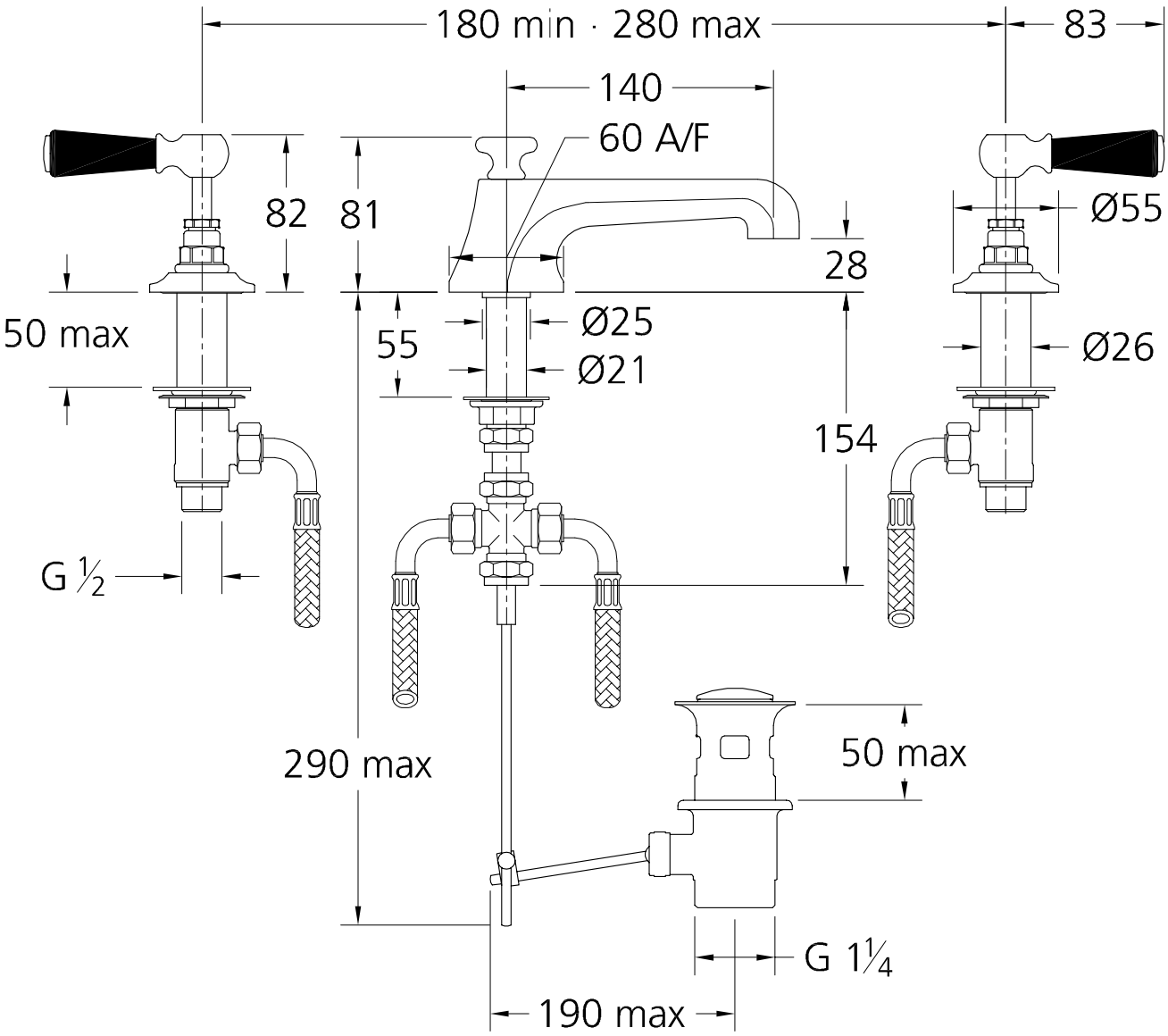
Dimensions in millimetres
To convert into inches divide by 25.4