BL 8725

PDF

Exposed Black Lever
Dual Control Godolphin
Thermostatic mixing valve
with Top return Bend to Wall
for Concealed Shower Outlet
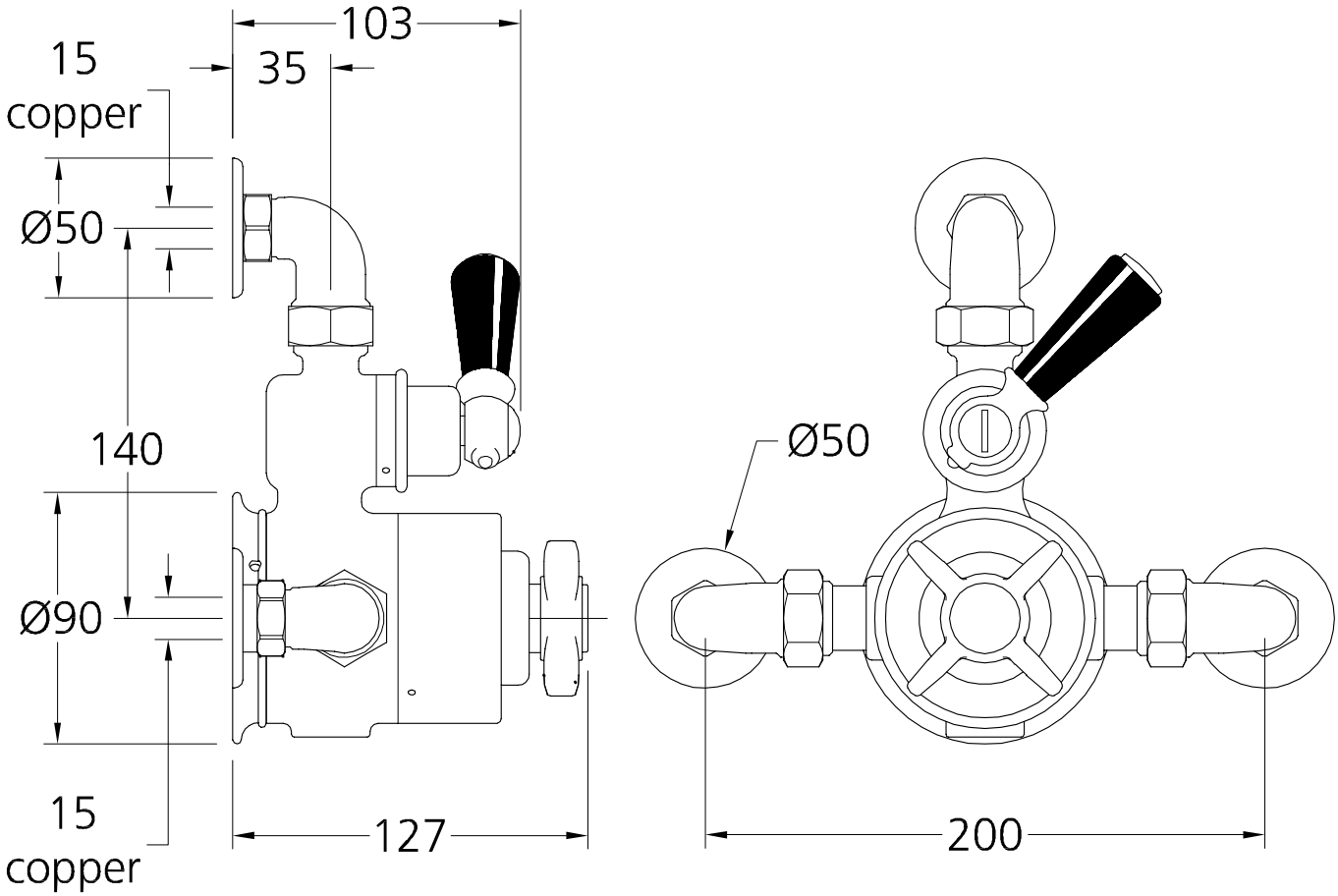
Dimensions in millimetres
To convert into inches divide by 25.4