CH 1107

PDF

Connaught Deck
Mounted Bath Filler
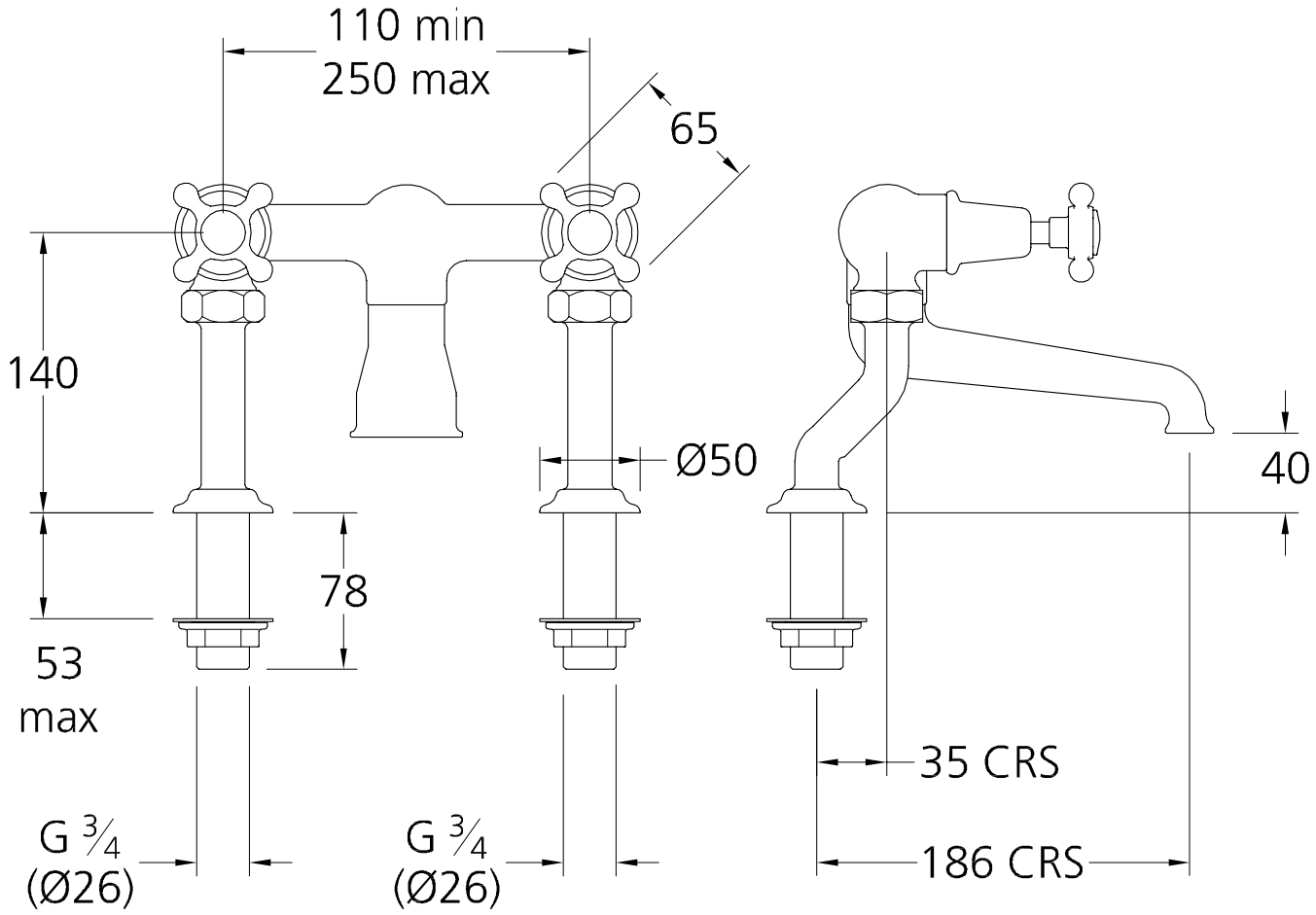
Dimensions in millimetres
To convert into inches divide by 25.4