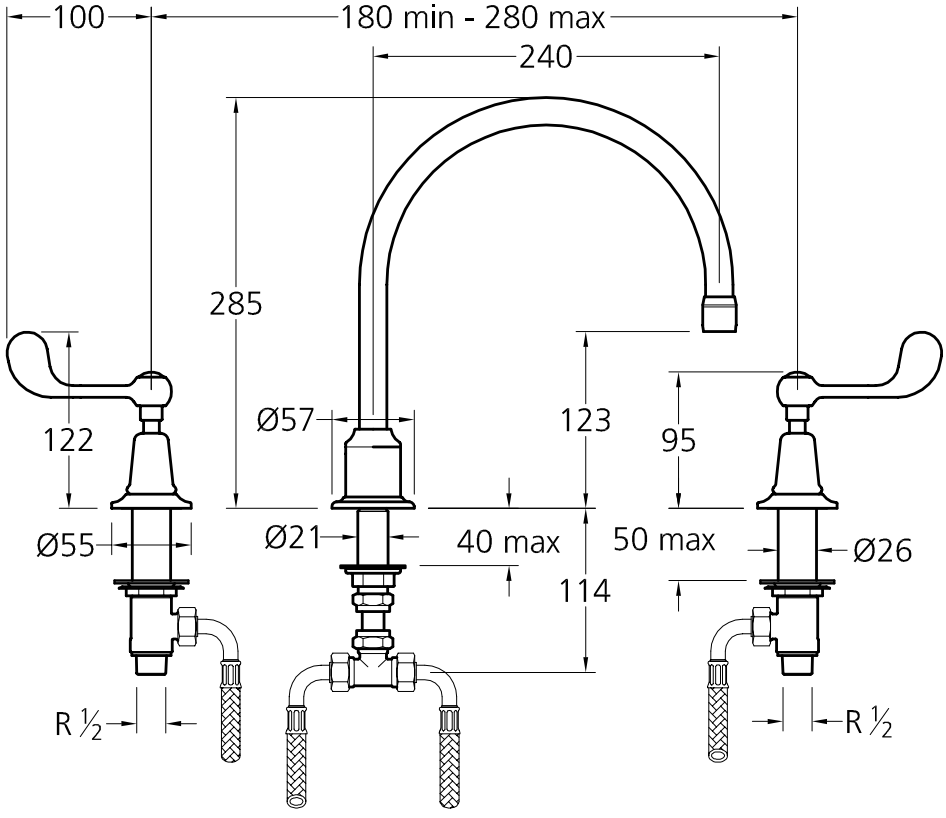

CATALOGUE ILLUSTRATION
Product Ref: CL1560
Revision: A
Issue: 028