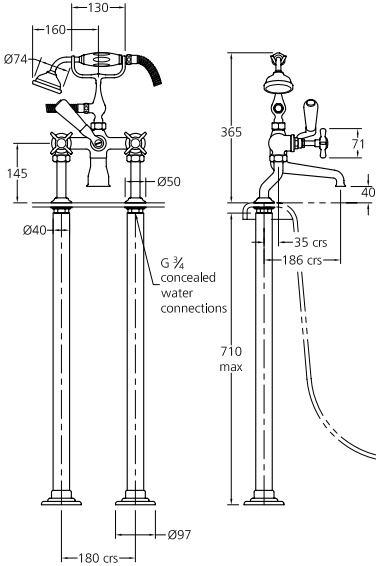

CATALOGUE ILLUSTRATION
Product Ref: LB1145
Revision: A
Issue: 009