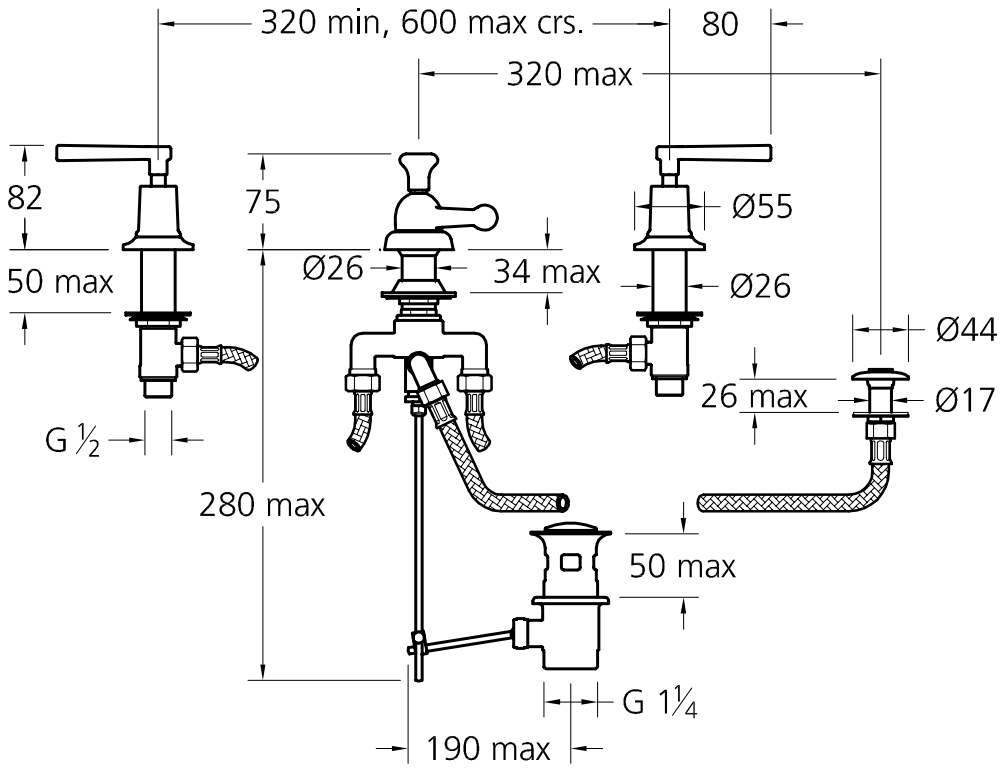


| CATALOGUE ILLUSTRATION |
|---|
| Product Ref: ML1461 |
| Revision: - |
| Issue: 020 |