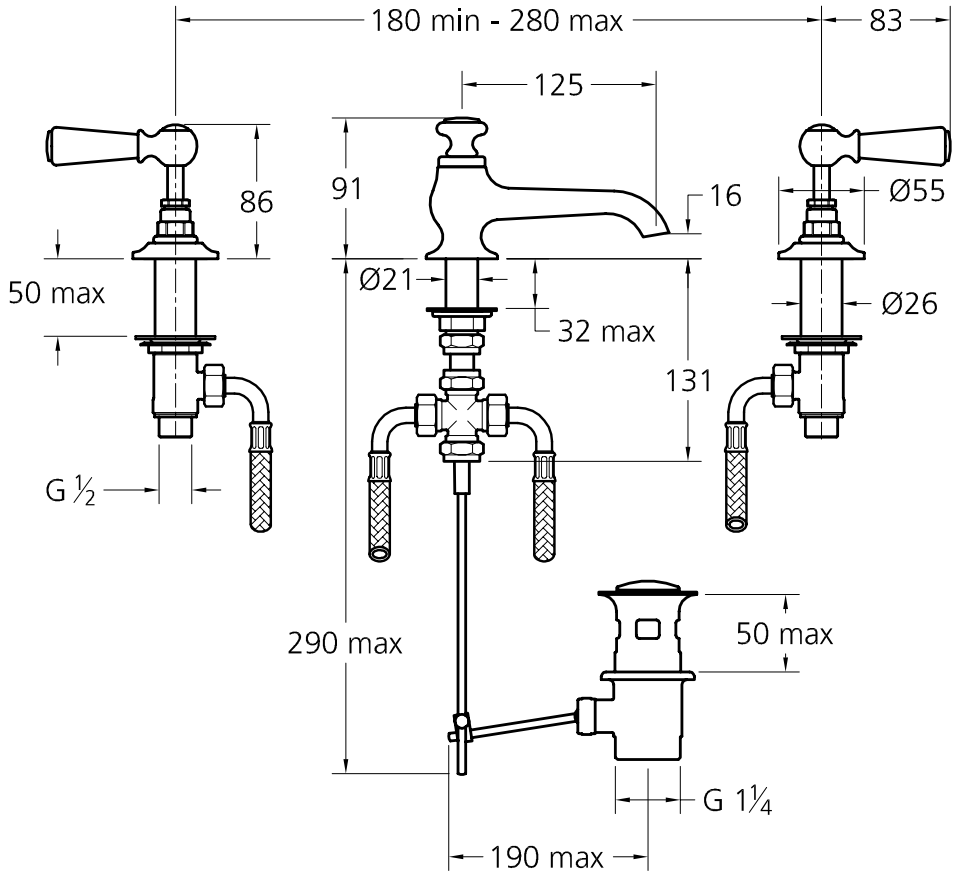

CATALOGUE ILLUSTRATION
Product Ref: WL1224
Revision: A
Issue: 007