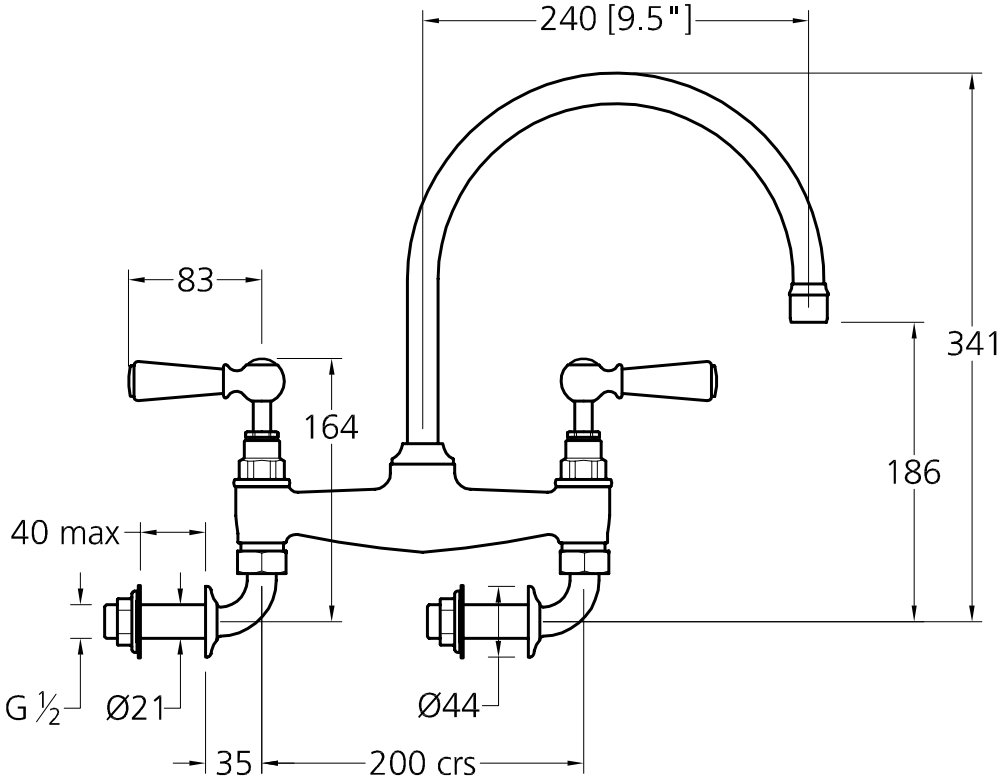

CATALOGUE ILLUSTRATION
Product Ref: WL1518
Revision: A
Issue: 007