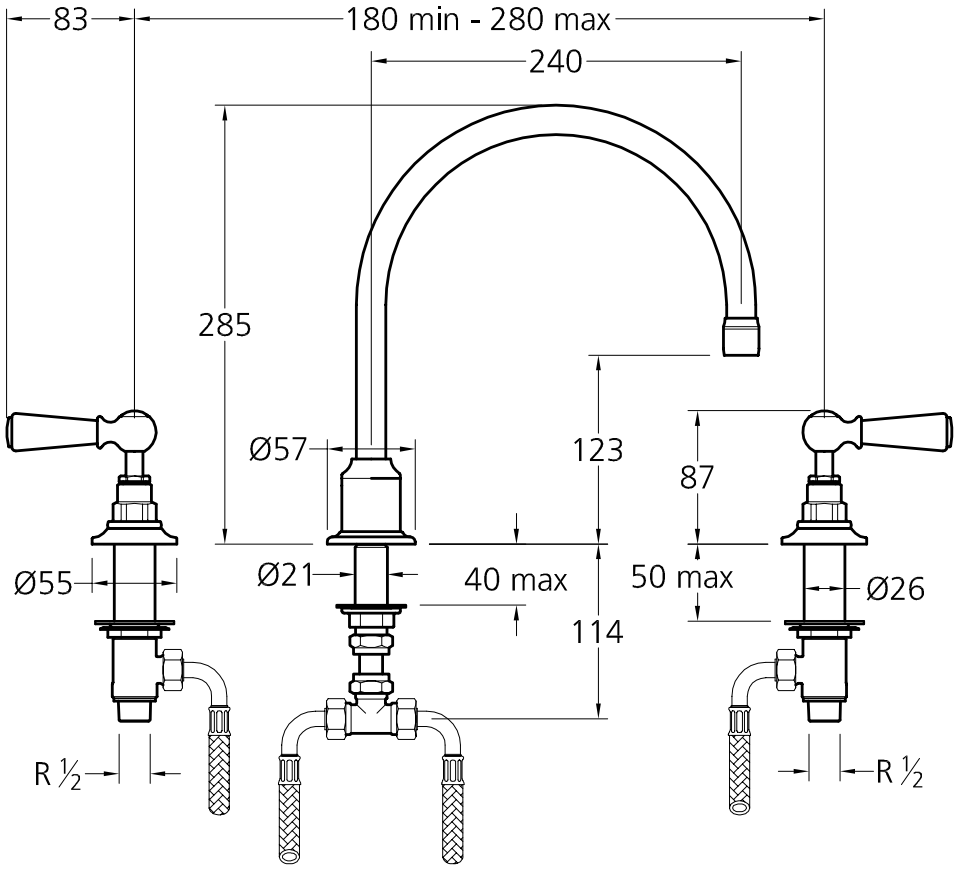

CATALOGUE ILLUSTRATION
Product Ref: WL1560
Revision: A
Issue: 028