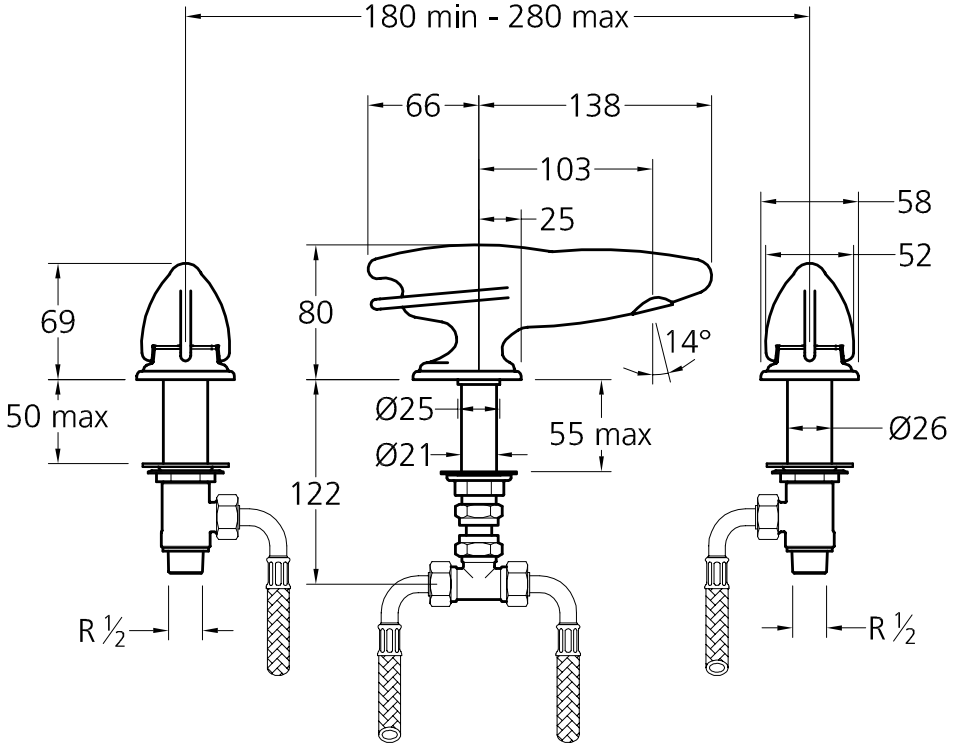

CATALOGUE ILLUSTRATION
Product Ref: RH1236
Revision: A
Issue: 027